heirloom
The finishing touch

RADIAL 360
COUNTER TOP BASIN
355 x 120
362100

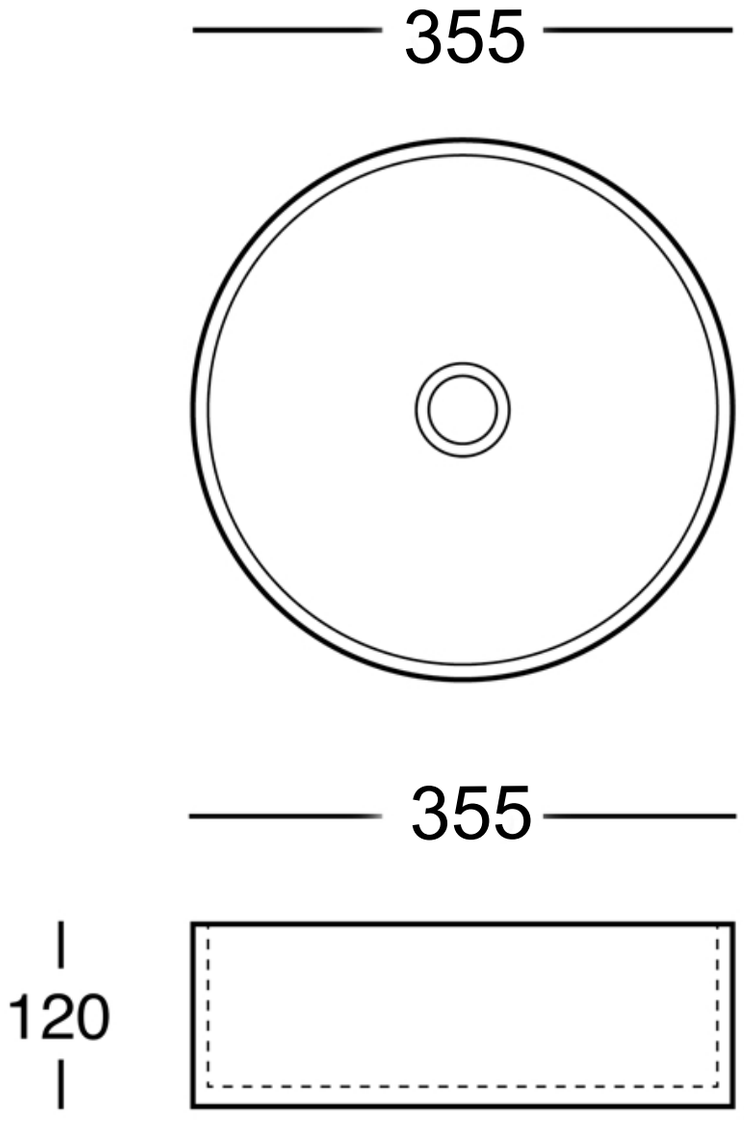

MEASUREMENTS SUBJECT TO MANUFACTURING TOLERANCE