heirloom
The finishing touch

SENTINEL JUNIOR TWIST SUITE 374200S / 374200SE / 374200P

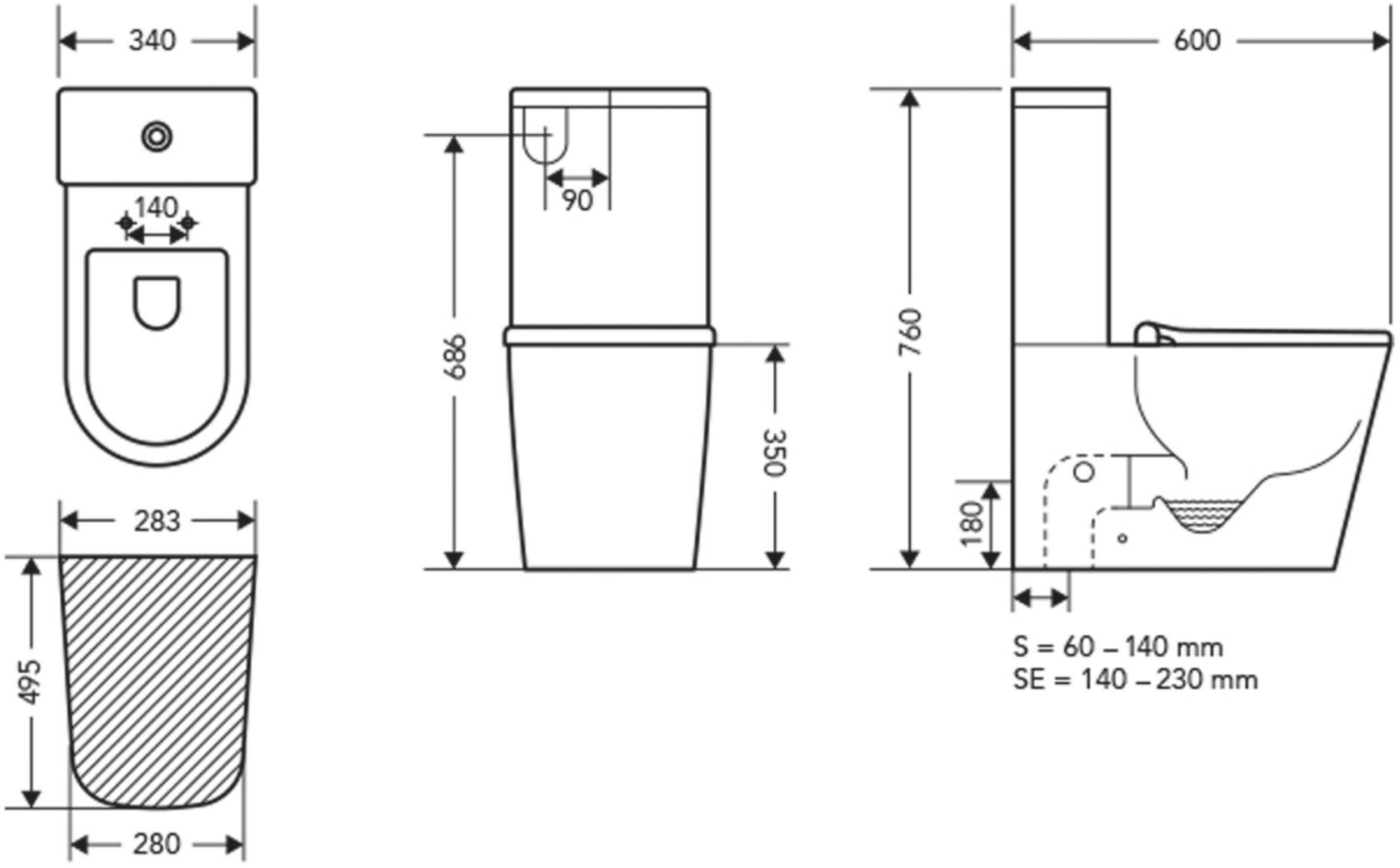

FEB26

MEASUREMENTS SUBJECT TO MANUFACTURING TOLERANCE
SPECIFICATIONS MAY CHANGE WITHOUT NOTICE