SERIES 209
TALL BASIN MIXER
T209TM/N/BN/BB/GM

HEIRLOOM
THE FINISHING TOUCH

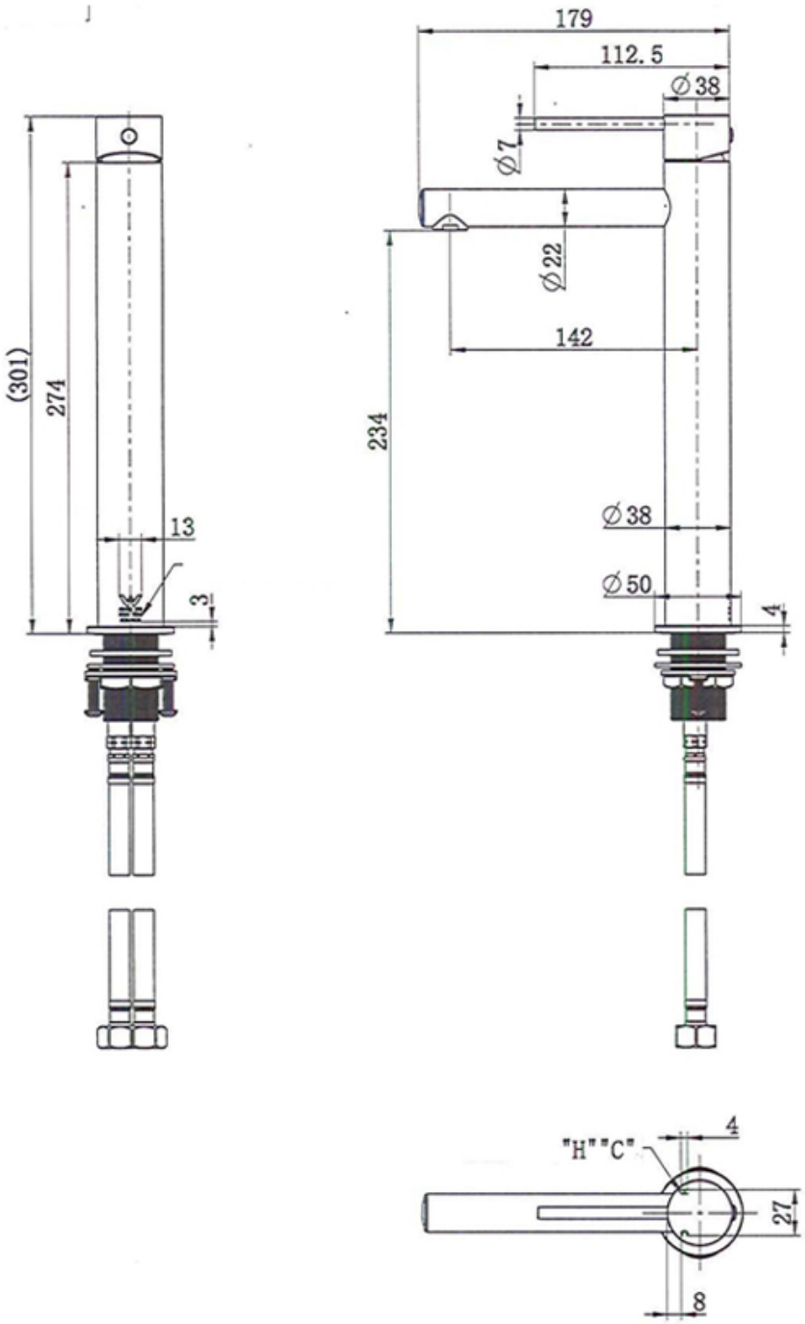

MEASUREMENTS SUBJECT TO MANUFACTURING TOLERANCE
SPECIFICATIONS MAY CHANGE WITHOUT NOTICE